Lift tables and lifting platforms

ATLAS LIFT

Lifting solutions

AVL/SN series

Lifting capacity up to 12,000 daN

Industries

- Wood
- Aerospace
- Construction/Logistics
- Food/Pharmaceutical
- Automotive
- Stage equipment
- Maritime
- Railway

Functions

- Ergonomics
- Handling
- Process

Designed and manufactured in France

Applications

- Load transfer
- Level changes
- Integration into automatic and semi-automatic production lines
- Machine loading and unloading
- Palletising
- Vehicle transfer
- Your own application...



Design

- AVL and SN series lift tables are designed to take all types of load distribution
- Smooth or chequer-plate platform
- Joints, bearings and rollers fitted with maintenance-free self-lubricating bushes, designed as standard for 20 cycles per hour, 8 hours a day, 5 days a week
- Electro-hydraulic power unit with IP54 motor
- External electrical cabinet for 400 V three-phase 50 Hz supply

Standard version specifications

Range	Model	Lifting capacity (daN)	Length range (mm)	Width range (mm)	Closed height (mm)	Standard max. travel (mm)
AVL	Single scissor lift table	up to 2,000	800 to 3,000	600 to 2,000	150 to 400	1,900
SN	Fixed single scissor lift table, standard series	up to 12,000	1,000 to 5,000	800 to 5,000	250 to 800	1,650

Main standard options

- Bridge plate, manually or hydraulically raised
- Standard-compliant safety guardrail
- Scissor protection: bellows, weighted covers or removable panels
- Rotating, tilting or sliding platform
- Free or motorised rollers
- Reinforced platform for low-position overloads
- Manual or motorised wheels, for floor or rails
- Retractable kickplates and stops
- Joints for continuous operation at high cycle rates
- Constant-level device with photoelectric cell for stacking and unstacking sheet materials (cardboard, wood, plasterboard…)
- Special electrical equipment: ATEX, tropicalised, PLC, programming…
- Treatment for aggressive environments (sandblasting, PU paint, epoxy paint, metallisation, hot-dip galvanising)
- RAL paint colour to customer requirements

Bespoke version

In addition to its Design Office, ATLAS LIFT has a Pre-Project Department for all your specific requirements: dimensions, capacities, speed, cycle rate, position...

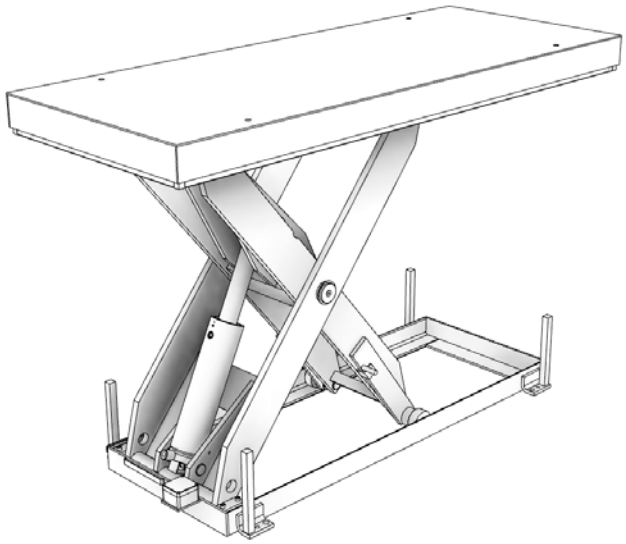

ATLAS LIFT benefits

- **Made in France**
- **Premium product**
- **3-year warranty**
- **On-site commissioning**
- **After-sales service & maintenance**
- **Nationwide coverage in France through a network of area managers and integration partners**
- **Export department**

Maximum safety

The design and construction of these standard lift tables comply with French regulations transposing the European Machinery Directive 2006/42/EC. European lift table standard EN 1570-1. All models are supplied with CE marking.

Safety information sheet available at www.atlas-lift.com

Edition 11/2021

ATLAS LIFT

ATLAS LIFT
Tel: +33 (0)5 46 92 48 00
commercial@atlas-lift.com
www.atlas-lift.com

ZI de l'Ormeau de Pied - 7 rue des Signaux
BP 50243 - 17105 SAINTES CEDEX - FRANCE
SAS with share capital of €1,195,000 - SIRET 444 701 320 00020 - APE 2822Z
EU VAT No. FR19 444 701 320