Lift tables and lifting platforms

ATLAS LIFT

Lifting solutions

Low-profile series EB/ EBU/EBE/FST/FSE/FSU

Lifting capacity up to 2,000 daN

Industries

- Wood
- Aerospace
- Construction/Logistics
- Food/Pharmaceutical
- Automotive
- Stage equipment
- Maritime

Functions

- Ergonomics
- Handling

Designed and manufactured in France

Applications

- Palletising
- Order picking
- Packaging line infeed and outfeed
- Workstation layout
- Your own application...

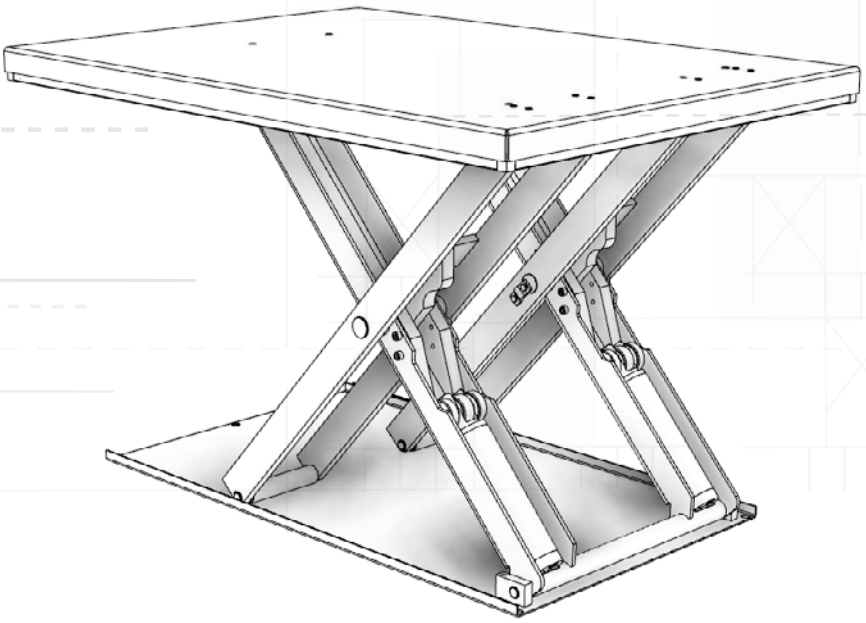

Design

- Folded smooth sheet-steel platform on all models
- Single-acting cylinder with chrome-plated steel rod and mechanical end stop
- Electro-hydraulic power unit with IP54 motor
- Joints, bearings and rollers fitted with maintenance-free self-lubricating bushes, designed as standard for 10 cycles per hour, 8 hours a day, 5 days a week
- External electrical cabinet for 400 V three-phase 50 Hz supply

Standard version specifications

Range	Model	Lifting capacity (daN)	Length range (mm)	Width range (mm)	Closed height (mm)	Standard max. travel (mm)
EB EBU EBE	Fixed low-profile single scissor lift table	up to 1,500	1,400 to 1,650	1,000 to 1,300	85	815
FST FSE FSU	Fixed low-profile single scissor lift table	up to 2,000	1,500 to 1,800	1,000 to 1,300	100	720

Main standard options

- Access ramp for the EB model
- Up/down foot pedal control
- Other supply and control voltages
- Side bellows protection on all models
- Mobile version with removable drawbar and retractable wheels
- Constant-level device with photoelectric cell for stacking and unstacking sheet materials (cardboard, wood, plasterboard…)

Bespoke version

In addition to its Design Office, ATLAS LIFT has a Pre-Project Department for all your specific requirements: dimensions, capacities, speed, cycle rate, position...

- Treatment for aggressive environments (sandblasting, PU paint, epoxy paint, metallisation, hot-dip galvanising)
- Stainless steel
- Anti-slip paint
- Manual swivel platform
- RAL paint colour to customer requirements



EB / FST



EBU / FSU



EBE / FSE

ATLAS LIFT benefits

- **Made in France**
- **Premium product**
- **3-year warranty**
- **On-site commissioning**
- **After-sales service & maintenance**
- **Nationwide coverage in France through a network of area managers and integration partners**
- **Export department**

Maximum safety

The design and construction of these standard lift tables comply with French regulations transposing the European Machinery Directive 2006/42/EC. European lift table standard EN 1570-1. All models are supplied with CE marking.

Safety information sheet available at www.atlas-lift.com

Edition 1/2021

ATLAS LIFT

ATLAS LIFT
Tel: +33 (0)5 46 92 48 00
commercial@atlas-lift.com
www.atlas-lift.com

ZI de l'Ormeau de Pied - 7 rue des Signaux
BP 50243 - 17105 SAINTES CEDEX - FRANCE
SAS with share capital of €1,195,000 - SIRET 444 701 320 00020 - APE 2822Z
EU VAT No. FR19 444 701 320