Lift tables and lifting platforms

ATLAS LIFT

Lifting solutions

SL series

Lifting capacity up to 2,000 daN

Industries

- Wood
- Aerospace
- Construction/Logistics
- Food/Pharmaceutical
- Stage equipment
- Maritime

Functions

- Ergonomics
- Handling

Applications

- Assembly
- Inspection
- Order picking
- Palletising
- Packing
- Packaging
- Your own application...



Designed and manufactured in France

Design

- Designed for loads evenly distributed over the whole platform area
- Folded smooth sheet-steel platform
- Maintenance-free joints, bearings and rollers in synthetic materials, designed as standard for 10 cycles per hour, 8 hours a day, 5 days a week
- Electro-hydraulic power unit with IP54 motor
- External electrical cabinet for 400 V three-phase 50 Hz supply

Standard version specifications

Range	Model	Lifting capacity (daN)	Length range (mm)	Width range (mm)	Closed height (mm)	Standard max. travel (mm)
SL	Fixed single scissor lift table, "light series"	up to 2,000	1,200 to 1,650	800 to 1,200	180 to 280	1,000

Main standard options

- Bridge plate, manually or hydraulically raised
- Standard-compliant safety guardrails
- Protective skirts: bellows, weighted covers or removable panels
- Rotating, tilting or telescopic platform
- Free or motorised rollers
- Reinforced platform for low-position overloads
- Manual or motorised wheels, for floor or rails

- Retractable kickplate and stop
- Special joints for continuous operation at high cycle rates
- Constant-level device with photoelectric cell for stacking and unstacking sheet materials (cardboard, wood, plasterboard…)
- Designed and built for installation in ATEX zones
- RAL paint colour to customer requirements

Bespoke version

In addition to its Design Office, ATLAS LIFT has a Pre-Project Department for all your specific requirements: dimensions, capacities, speed, cycle rate, position...

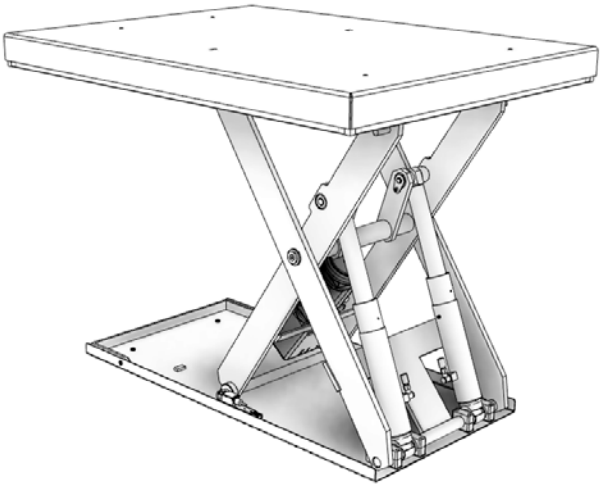

ATLAS LIFT benefits

- **Made in France**
- **Premium product**
- **3-year warranty**
- **On-site commissioning**
- **After-sales service & maintenance**
- **Nationwide coverage in France through a network of area managers and integration partners**
- **Export department**

Maximum safety

The design and construction of these standard lift tables comply with French regulations transposing the European Machinery Directive 2006/42/EC. European lift table standard EN 1570-1. All models are supplied with CE marking.

Safety information sheet available at www.atlas-lift.com

Edition 11/2021

ATLAS LIFT

ATLAS LIFT
Tel: +33 (0)5 46 92 48 00
commercial@atlas-lift.com
www.atlas-lift.com

ZI de l'Ormeau de Pied - 7 rue des Signaux
BP 50243 - 17105 SAINTES CEDEX - FRANCE
SAS with share capital of €1,195,000 - SIRET 444 701 320 00020 - APE 2822Z
EU VAT No. FR19 444 701 320